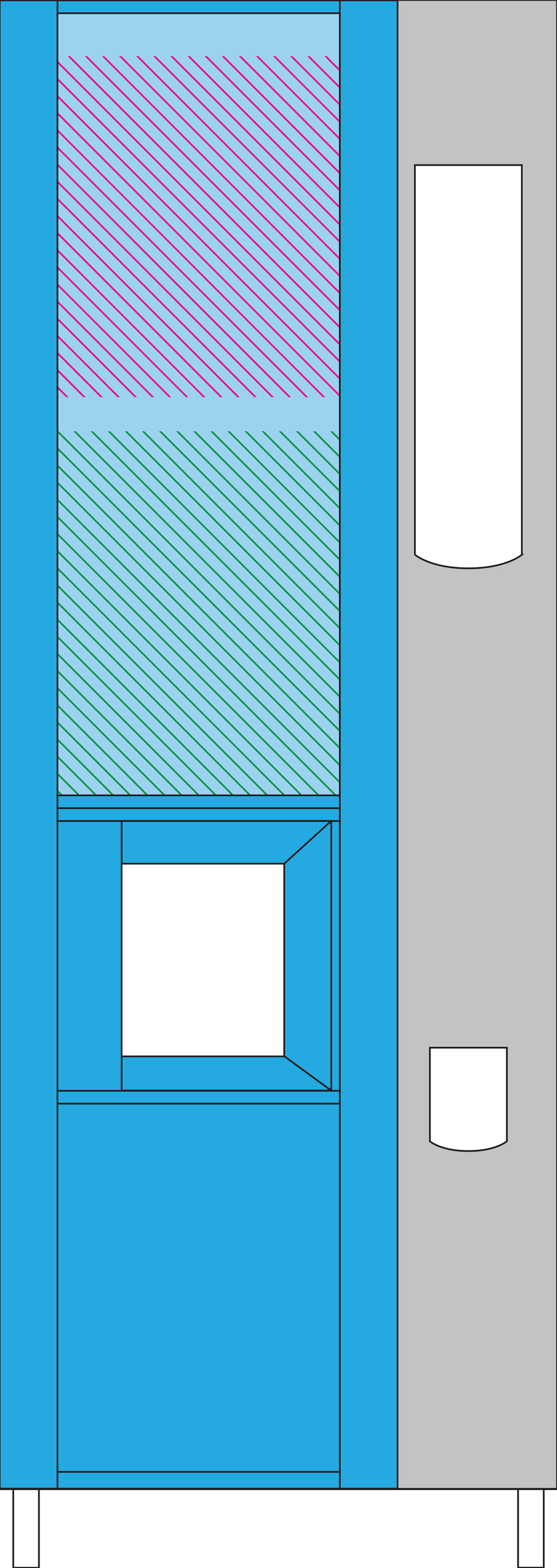

# MAIN SIZE

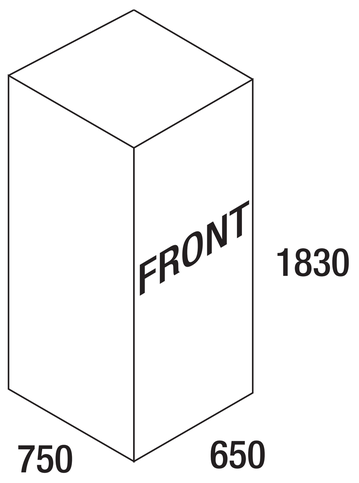


# KEYBOARD TEXTS + SIZE

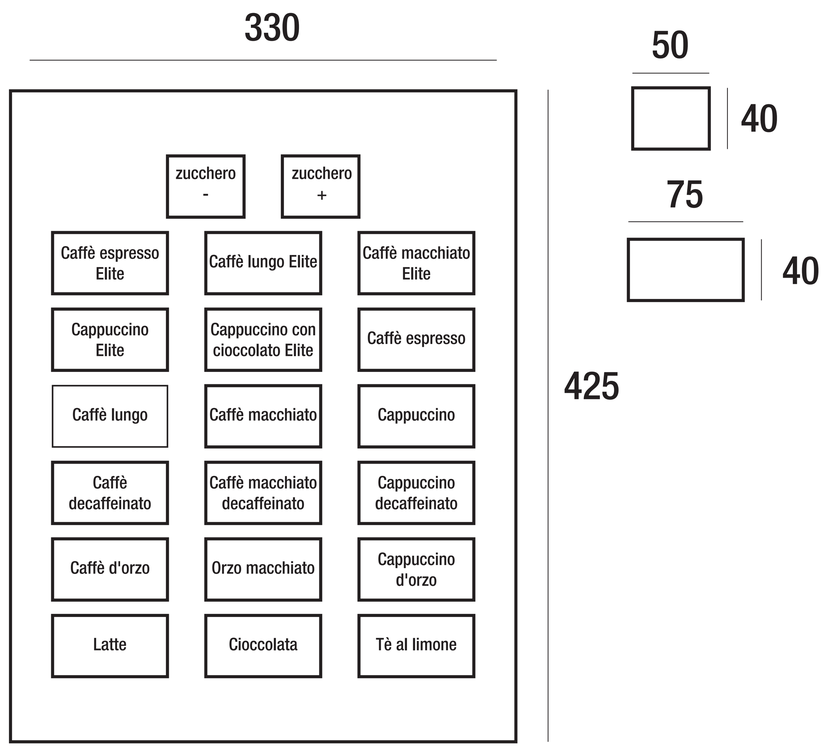


# DESIGN AREAS

- DESIGN AREA (background panel)
- COLOUR ONLY
- NO DESIGN AREA
- GLASS PANE
- MONITOR
- KEYBOARD

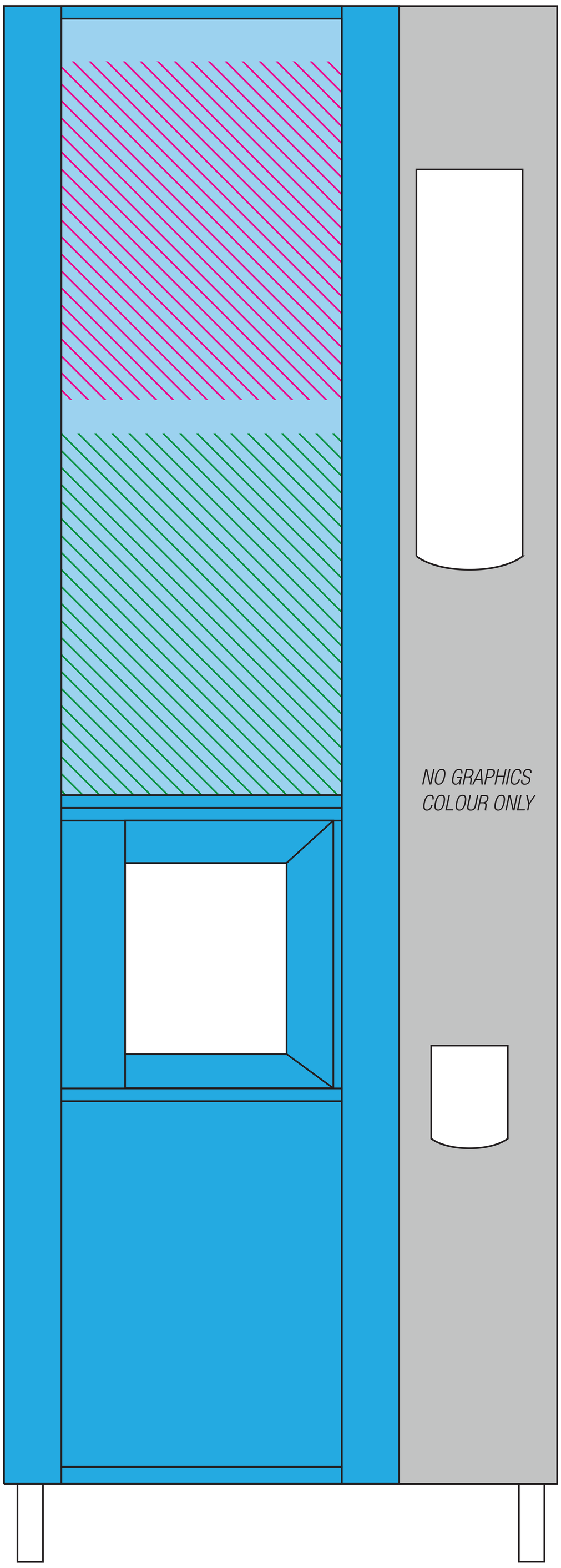


# MACHINE SIZE

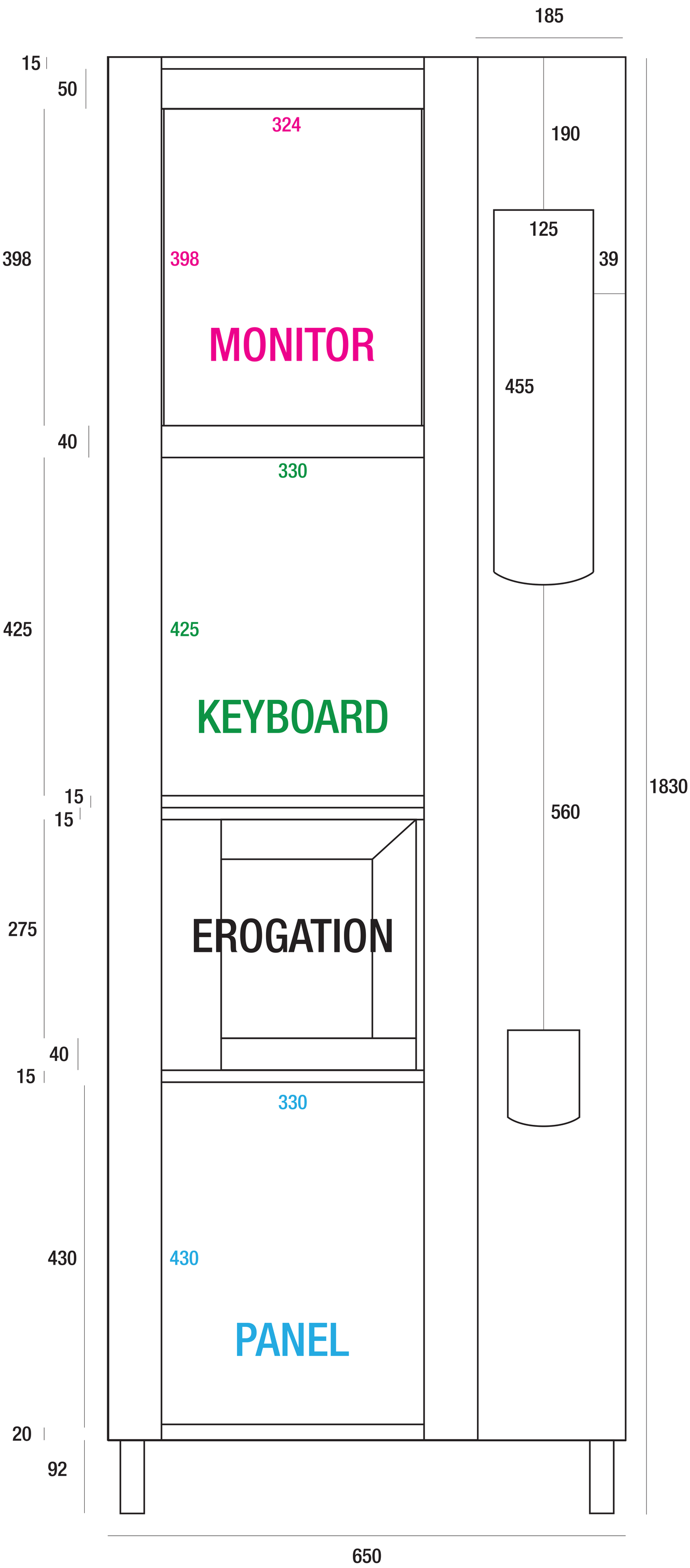

The Novaceler
for LASER fib
The NO
for LASER